CABINET ASSEMBLY

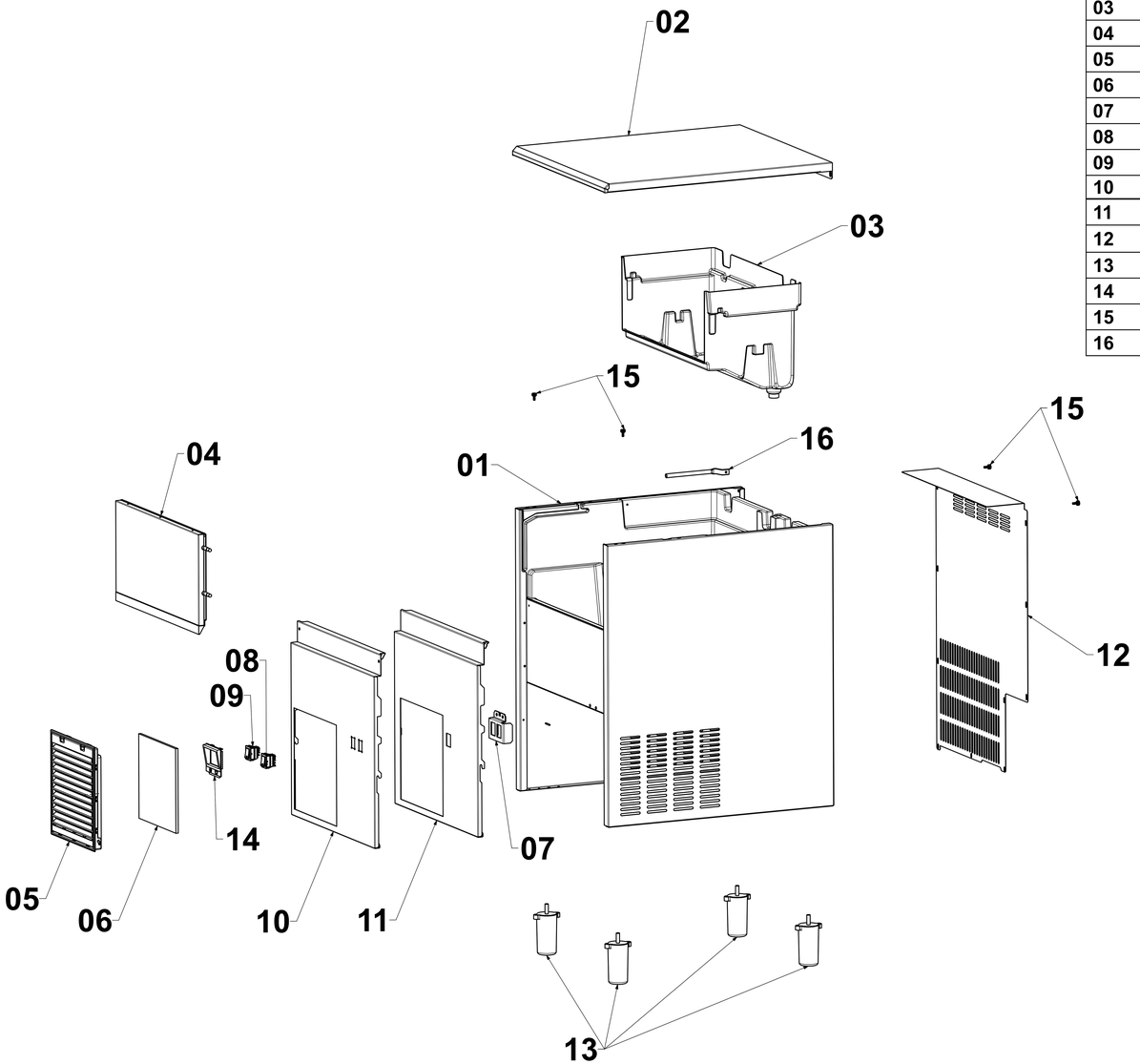

PART NUMBER	FR25	FR30	FR35	FR40	FR50	FR60	FR70	FR90	Explanation
01	5500300100	5501010100	5500030100	5500030100	5500290100	5500290100	5500400100	5500400100	P.U Body Pack
02	1101950100	1105250100	1100320100	1100320100	1100320100	1100320100	1102310100	1102310100	Top Panel
03	1102130100	1105310100	1100020100	1100020100	1101310100	1101310100	1102590100	1102590100	Inner Basin
04	5500460100	5501020100	5500040100	5500040100	5500040100	5500040100	5500470100	5500470100	Door Pack
05	-	5500130100	5500130100	5500130100	5500130100	5500130100	5500130100	5500130100	Filter Group
06	-	1100510100	1100510100	1100510100	1100510100	1100510100	1100510100	1100510100	Sponge Air Filter
07	1105380100	1105380100	1105380100	1105380100	1105380100	1105380100	1105380100	1105380100	Button Holder
08	1105950100	1105950100	1105950100	1105950100	1105950100	1105950100	1105950100	1105950100	Cleaning Button
09	1100480200	1100480200	1100480200	1100480200	1100480200	1100480200	1100480200	1100480200	Power Switch
10	1106070100	1106140100	1106080100	1106080100	1106090100	1106090100	1106100100	1106100100	Front Grid Panel V1
11	1102020100	1105230100	1100350100	1100350100	1101380100	1101380100	1102320100	1102320100	Front Grid Panel V2
12	1101990100	1105260100	1100300100	1100300100	1101350100	1101350100	1102330100	1102330100	Rear Panel
13	1102250100	1102250100	5500260100	5500260100	5500260100	5500260100	5500260100	5500260100	Adjustable Foot
14	1106670100	1106670100	1106670100	1106670100	1106670100	1106670100	1106670100	1106670100	Button Frame
15	1105620100	1105620100	1105620100	1105620100	1105620100	1105620100	1105620100	1105620100	Top Sheet Assembly Screw
16	1102400100	1102400200	1102400200	1102400200	1102400200	1102400200	1102400200	1102400200	Bulbe-Holder Pipe

frozy

Buz Makineleri | *Ice Makers*

Rev02

COOLING SYSTEM

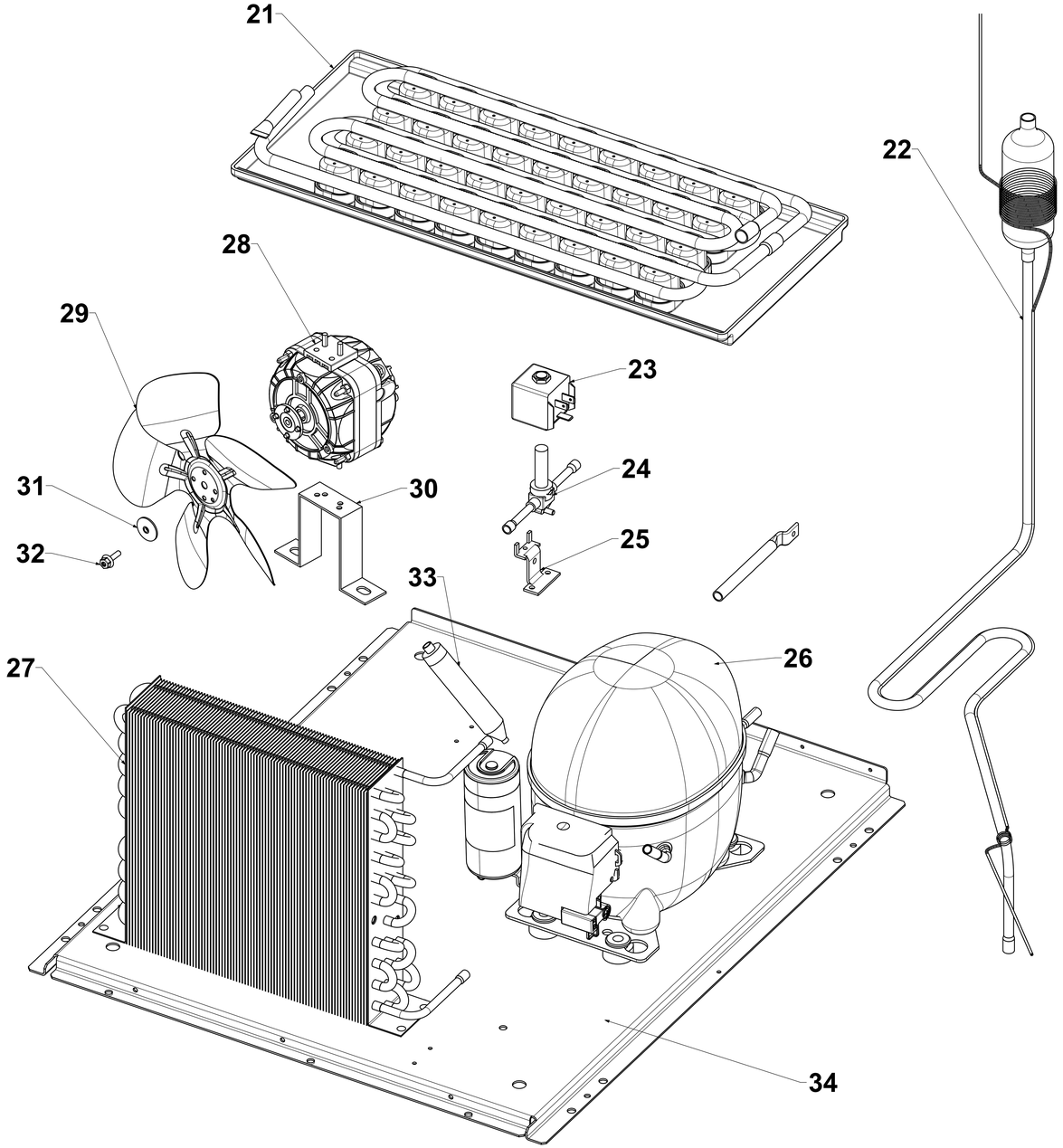

PART NUMBER	FR25	FR30	FR35	FR40	FR50	FR60	FR70	FR90	Explanation
21	5500540100	5500540100	5500200100	5501060100	5500360100	5500360100	5500640100	5500640100	Coated Evaporator Group
22	1102180100	1106250100	1103970100	1105980100	1101880100	1108420100	1102630100	1102710100	Heat Exchanger
23	1104400100	1104400100	1104400100	1104400100	1104400100	1104400100	1105850103	1105850103	Hot Gas Valve Coil
24	1104390100	1104390100	1104390100	1104390100	1104390100	1104390100	1104790100	1104790100	Hot Gas Valve Body
25	1102240100	1102240100	1102240100	1102240100	1102240100	1102240100	1102240100	1102240100	Hot Gas Valve Bracket
26	1104890100	1104920100	1100360100	1104920100	1101850100	1104970100	1104970100	1105010100	Compressor
27	1102150100	1106380100	1101130100	1103640100	1103640100	1103640100	1106240100	1107710100	Condenser
28	1106300100	1106300200	1106300200	1106300200	1106300200	1106300200	1106300300	1106300300	Fan Motor
29	1100380100	1100380100	1100380100	1100380100	1100380100	1100380100	1100380300	1100380300	Sucking Fan
30	1100740400	-	-	-	-	-	-	-	Mounting Bracket Fan Mount
31	1106730100	1106730100	1106730100	1106730100	1106730100	1106730100	1106730100	1106730100	Fan Blade Assembly Flat Washer
32	1106710100	1106710100	1106710100	1106710100	1106710100	1106710100	1106710100	1106710100	Fan Blade Assembly Screw
33	1100390100	1100390100	1100390100	1100390100	1100390100	1100390100	1102910100	1102910100	Molecular Drier
34	1102090100	1105240100	1104020100	1104020100	1104020100	1104020100	1102340100	1102910100	Compressor Assembly Sheet

frozy

Buz Makineleri | *Ice Makers*

Rev02

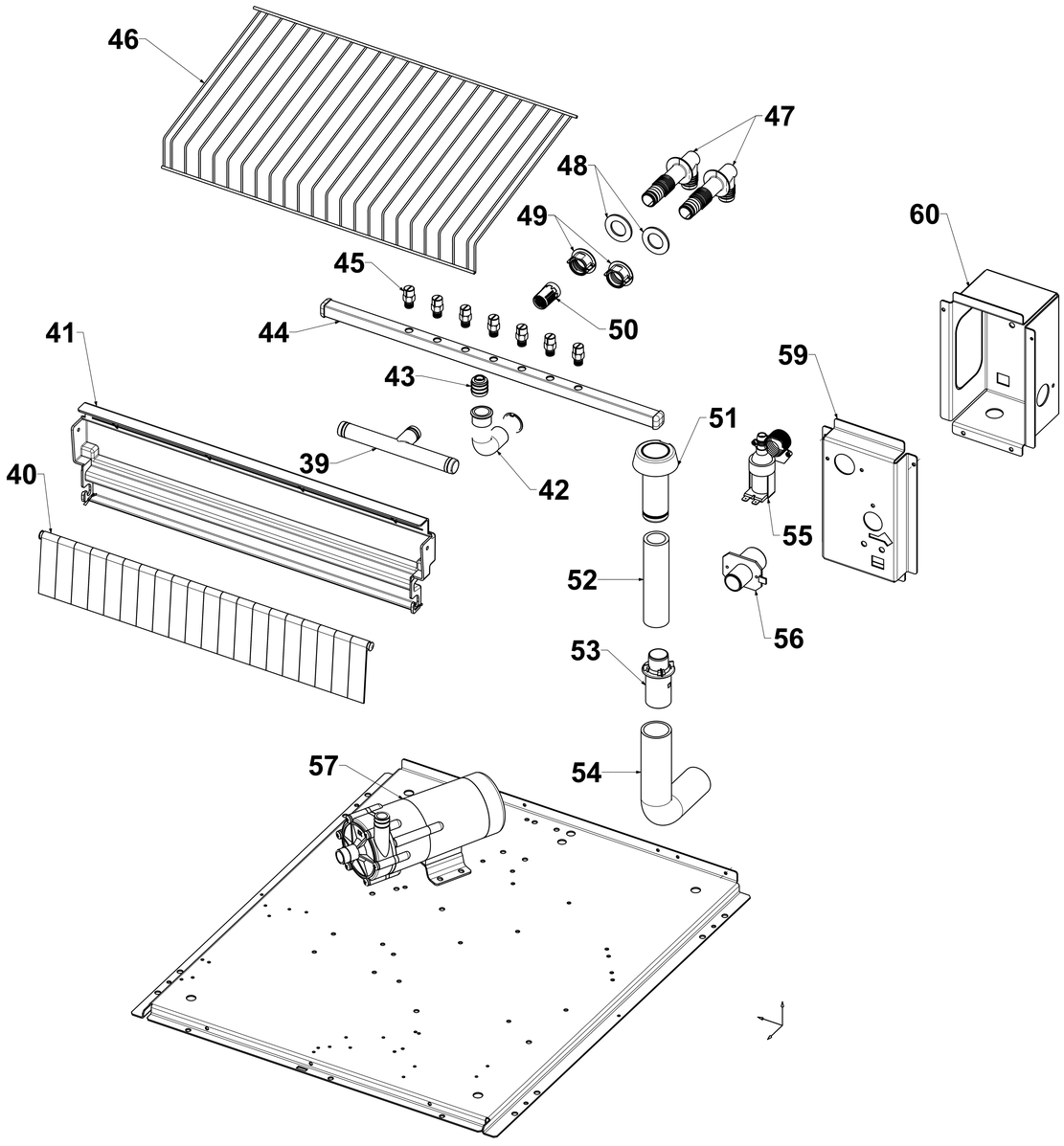

PART NUMBER	FR25	FR30	FR35	FR40	FR50	FR60	FR70	FR90	Explanation
39	-	-	-	-	1101910100	1101910100	1101910100	1101910100	Plastic T Profile
40	5500510100	5500510100	5500160100	5500160100	5500160100	5500160100	5500710100	5500710100	Flags with Rod
41	1101750100	1101750100	1100040100	1100040100	1100040100	1100040100	1101890100	1101890100	Flags ABS Support
42	1100840100	1100840100	1100840100	1100840100	1100840100	1100840100	1100840100	1100840100	Water Inlet Elbow
43	1102440100	1102440100	1102440100	1102440100	1102440100	1102440100	1102440100	1102440100	Water Inlet Flare
44	1102120100	1102120100	1100750100	1106390100	1102080100	1102080100	1102380100	1102380100	Sprayers Bar
45	1105960100	1105960100	1105960100	1100770100	1100770100	1100770100	1105960100	1105960100	Sprayer
46	1102070100	1102070100	1100220100	1100220100	1100220100	1100220100	1102410100	1102410100	Ice Cubes Slide
47	1100160100	1100160100	1100160100	1100160100	1100160100	1100160100	1100160100	1100160100	Water Pump Adapter
48	11100850100	1100850100	1100850100	1100850100	1100850100	1100850100	1100850100	1100850100	Sealing Gasket
49	1100170100	1100170100	1100170100	1100170100	1100170100	1100170100	1100170100	1100170100	Water Pump Adapter Lock
50	1100500100	1100500100	1100500100	1100500100	1100500100	1100500100	11005000100	1100500100	Filter-Sprayers Bar Connection Pipe
51	5500170100	5500170100	5500170100	5500170100	5500170100	5500170100	5501700100	5500170100	Water Level Drain Plastic Group
52	1101520200	1101520500	1101520100	1101520100	1101520300	1101520300	1100200400	1101520400	Hose 1'
53	1100190100	1100190100	1100190100	1100190100	1100190100	1100190100	1100190100	1100190100	Water Outlet Plastic
54	1101940200	1101940200	1101940200	1101940200	1101940200	1101940200	1101940100	1101940100	Water Outlet Elbow
55	1100560100	1100560100	1100560100	1100560100	1100560100	1100560100	1100560100	1100560100	Water Inlet Valve
56	1100860100	1100860100	1100860100	1100860100	1100860100	1100860100	1100860100	1100860100	Water Flare
57	1102190100	1102190100	1100600100	1100600100	1100600100	1100600100	1105930100	1105930100	Water Pump
59	1102190100	1106330100	1106330100	1106330100	1106330100	1106330100	-	-	Hose Support
60	-	-	-	-	-	-	1104420100	1104420100	Hose Support FR70/FR90

WATER DISTRIBUTION SYSTEM

frozy

Buz Makineleri | *Ice Makers*

Rev02

DRAIN PUMP INSTALLATION

PART NUMBER	FR25	FR30	FR35	FR40	FR50	FR70	FR90	Explanation
57	1100560100	1100560100	1100560100	1100560100	1100560100	1100560100	1100560100	Water Inlet Valve
60	1106330100	1106330100	1106330100	1106330100	1106330100	-	-	Hose Support
61	-	-	-	-	-	1104420100	1104420100	Hose Support FR70-FR90
62	-	1103610100	1103610100	1103610100	1103610100	1103610100	1103610100	Drain Pump
63	-	1104450100	1104450100	1104450100	1104450100	1104450100	1104450100	M6x10 Screw
64	-	1105560100	1105560100	1105560100	1105560100	1105560100	1105560100	Drain Pump Cable

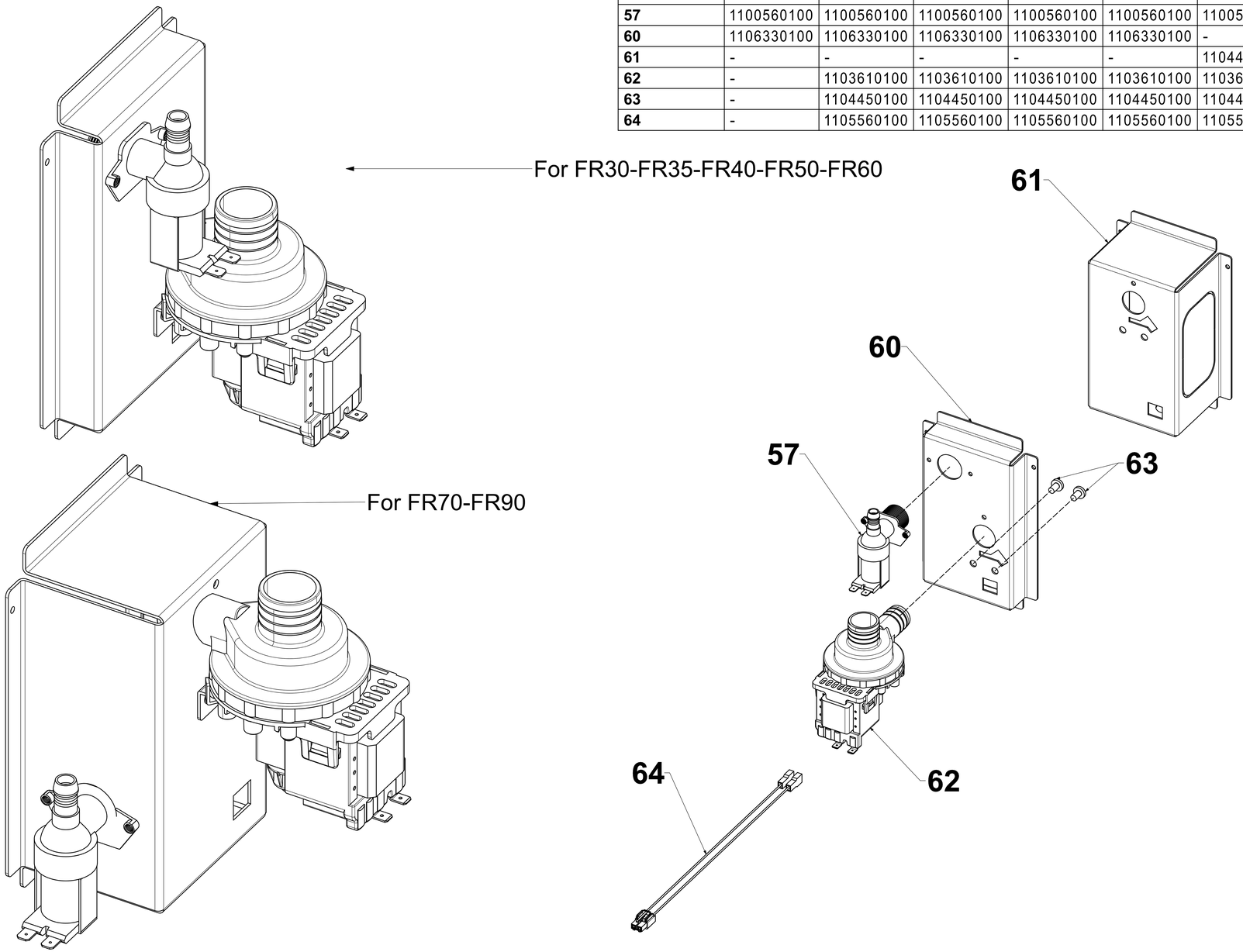

frozy

Buz Makineleri | *Ice Makers*

ELECTRONIC CONTROLLER

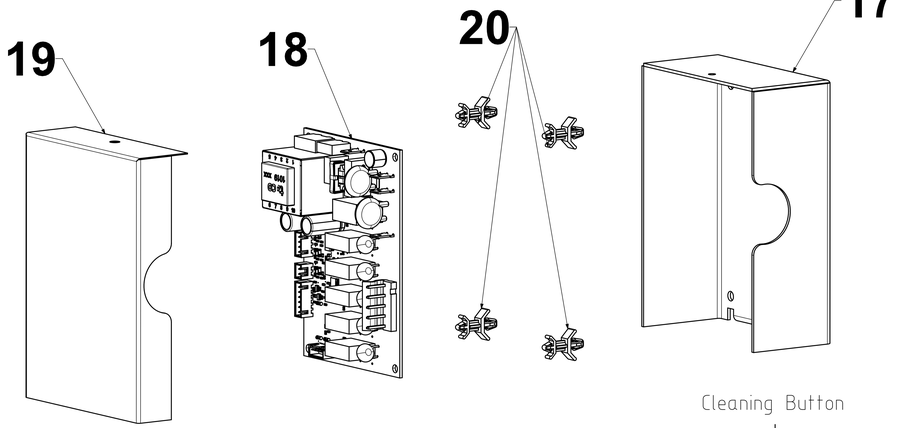

PART NUMBER	FR25	FR30	FR35	FR40	FR50	FR60	FR70	FR90	Explanation
8	1105950100	1105950100	1105950100	1105950100	1105950100	1105950100	1105950100	1105950100	Cleaning Button
9	1100480200	1100480200	1100480200	1100480200	1100480200	1100480200	1100480200	1100480200	Power Switch
17	1100080100	1100080100	1100080100	1100080100	1100080100	1100080100	1100080100	1100080100	Card Assembly Box
18	1105850101	1105850102	1105850103	1105850104	1105850105	1105850110	1105850201	1105850202	Controller V2
19	1105440100	1105440100	1105440100	1105440100	1105440100	1105440100	1105440100	1105440100	Card Cover Panel
20	1106060100	1106060100	1106060100	1106060100	1106060100	1106060100	1106060100	1106060100	Plastic Card Holder V2
21	1103010100	1103010100	1100460100	1100460100	1100460100	1100460100	1100460100	1100460100	Probe Evaporator - Condenser
22	1101490100	1101490100	1101490100	1101490100	1101490100	1101490100	1101490100	1101490100	Probe Ice Bin

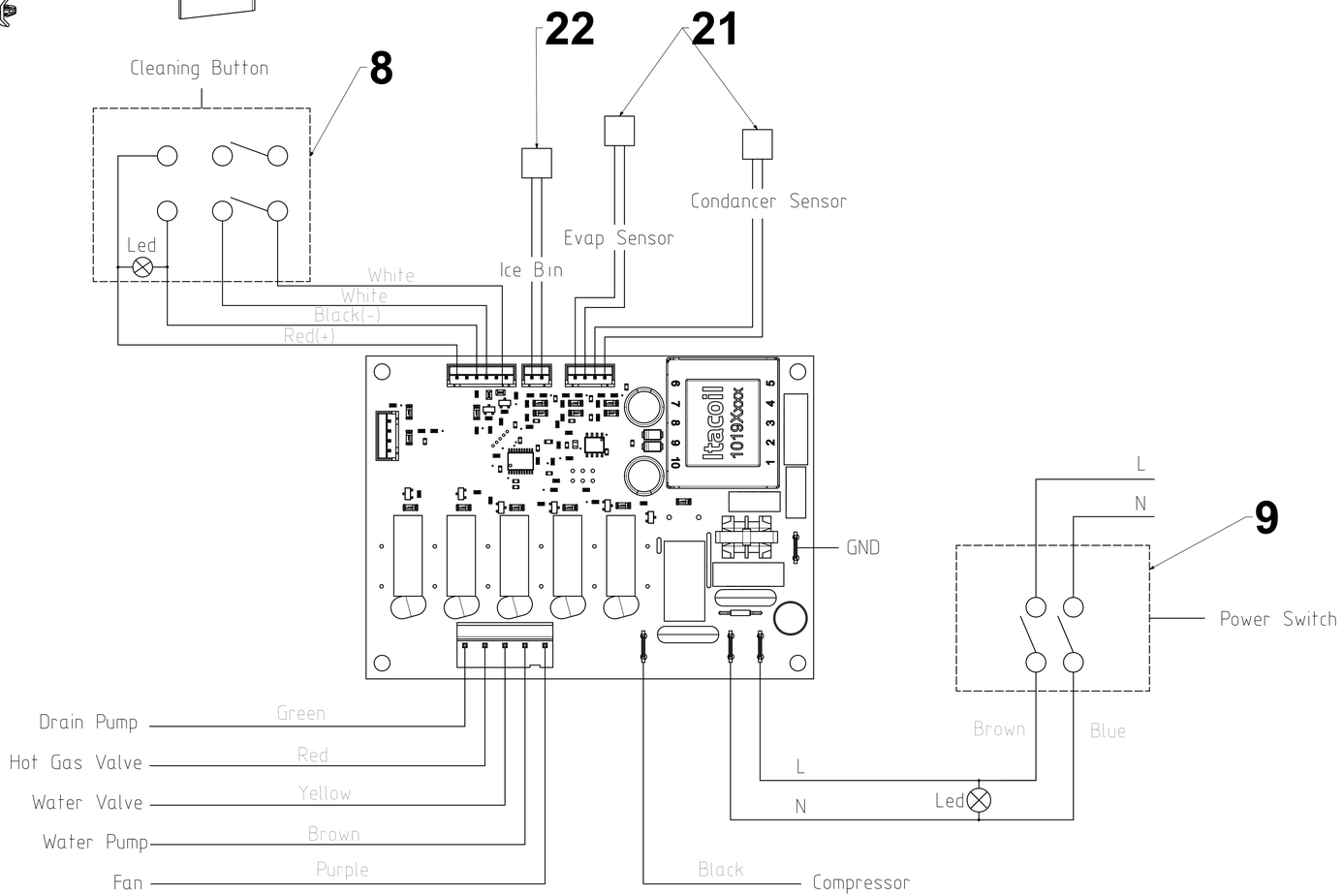

frozy

Buz Makineleri | *Ice Makers*

Rev02